Datasheet

→ KRGV

07/30/2026

Technical data

Emergency stop



Type	KRGV
Series	KOMBITAST®-R
Rubric	Emergency-stop
Approvals	CE

→ General data

Design	Round
Operating temperature	-30 °C ... 70 °C
Panel cut-out	Ø 30.5 mm
Mounting plate thickness	1 mm ... 6 mm
Color actuator	Red
Enclosure colour	Yellow
Weight	37.3 g
Storage temperature	-50 °C ... 85 °C
Standards	EN 60947-5-1 EN 60947-5-5 EN ISO 13850
Degree of protection front	IP65

Mechanical data

Anti-lock collar	Yes
Mounting position	Any
Release	Twist to release left/right
Switching function	Latching function

Technical drawings

➔ Dimensional drawing

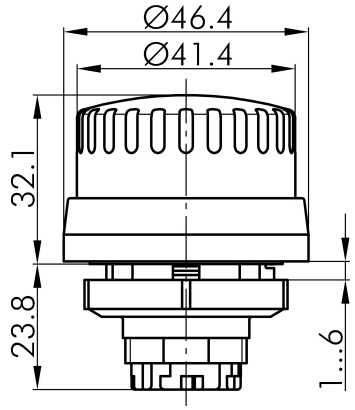

➔ Cutout dimensions

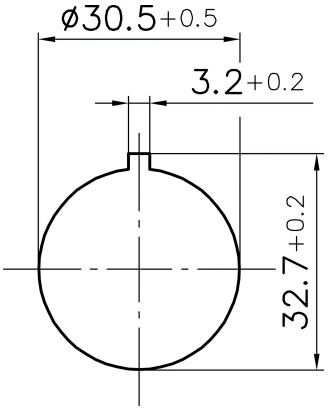

Georg Schlegel GmbH & Co. KG
Kapellenweg 4
88525 Dürmentingen / Germany

+49 (0) 7371 / 502-0
info@schlegel.biz
www.schlegel.biz