Datasheet

➔ RKSTAM

11/16/2026

Technical data

2-position selector switch, momentary



Type	RKSTAM
Series	OKTRON®-R
Rubric	Selector switch

Selector switches allow for the unambiguous selection of different operating modes, functions, or machine states. With their defined switching positions, they offer a high degree of operational safety and ensure clear identification of the selected function. Whether in manual, automatic, or service mode, selector switches are proven control elements for machines and systems that require reliable and traceable selection of operating modes.

➔ General data

Design	Round
Operating temperature	-25 °C ... 70 °C
Panel cut-out	Ø 16.2 mm
Mounting plate thickness	1 mm ... 5 mm
Color actuator	Black
Front bezel colour	Silver-coloured
Storage temperature	-50 °C ... 85 °C
Degree of protection front	IP65

➔ Mechanical data

Mounting position	Any
Switching position	0° zero position 40° momentary

Technical drawings

➔ Dimensional drawing

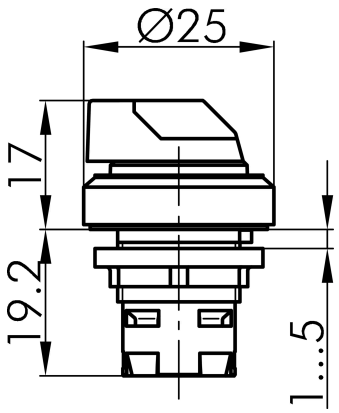

➔ Cutout dimensions

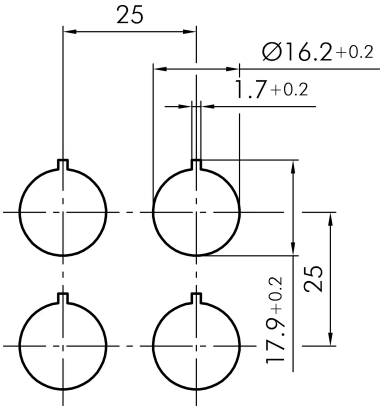

➔ Position indicator

