Datasheet

➔ RVAWA_DG

11/19/2026

Technical data

2-position selector switch, maintained



Type	RVAWA_DG
Series	RVA
Rubric	Selector switch
Approvals	CE

Selector switches allow for the unambiguous selection of different operating modes, functions, or machine states. With their defined switching positions, they offer a high degree of operational safety and ensure clear identification of the selected function. Whether in manual, automatic, or service mode, selector switches are proven control elements for machines and systems that require reliable and traceable selection of operating modes.

➔ General data

Design	Round
Panel cut-out	Ø 22.3 mm
Mounting plate thickness	1 mm ... 7 mm
Color actuator	Stainless steel
Front bezel colour	Stainless steel
Front ring colour	Charcoal
Weight	35.37 g
Degree of protection front	IP65

➔ Mechanical data

Mounting position	Any
Switching function	Latching function
Switching position	-45° zero position 45° maintained

Technical drawings

➔ Dimensional drawing

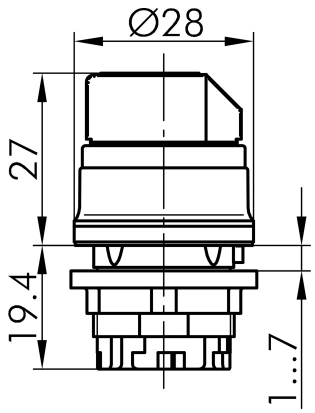

➔ Cutout dimensions

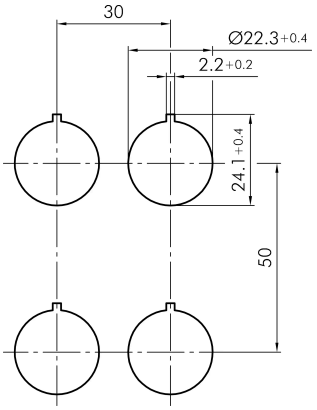

➔ Position indicator

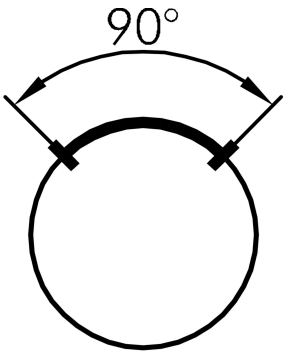

Georg Schlegel GmbH & Co. KG
Kapellenweg 4
88525 Dürmentingen / Germany

+49 (0) 7371 / 502-0
info@schlegel.biz
www.schlegel.biz