Datasheet
→ SVASSA16

02/03/2026

Technical data

Key switch maintained



Type	SVASSA16
Series	SHORTRON® base-plate mounting
Rubric	Key-operated switch
Approvals	CCC, CE, cURus, DNV, ENEC10, VDE, UKCA

→ General data

Design	Round
Operating temperature	-25 °C ... 70 °C
Panel cut-out	Ø 22.3 mm
Front bezel colour	Stainless steel
Storage temperature	-40 °C ... 80 °C
Degree of protection front	IP65

→ Mechanical data

Tightenting torque fixing nut	1.5 Nm ... 1.9 Nm
Mounting position	Any
Mounting plate thickness	1.5 mm ... 8 mm
Mechanical lifetime	30,000 switching cycles

Switching function	Latching function
Switching position	0° zero position 90° maintained, key removable

Note

- Includes 2 keys
- Different locking possible on request

Technical drawings

➔ Dimensional drawing

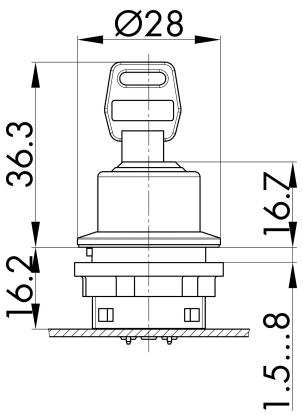

➔ Cutout dimensions

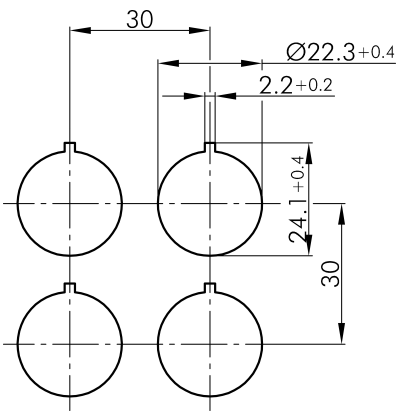

➔ Position indicator

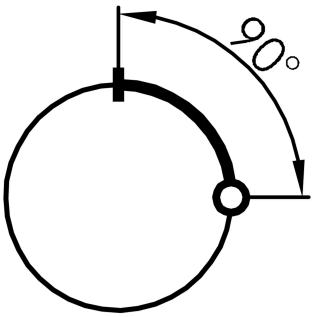

Georg Schlegel GmbH & Co. KG
Kapellenweg 4
88525 Dürmentingen / Germany

+49 (0) 7371 / 502-0
info@schlegel.biz
www.schlegel.biz