Datasheet

→ SVASSA14I

03/12/2026

Technical data

Key switch maintained



Type	SVASSA14I
Series	SHORTRON®
Rubric	Key-operated switch
Approvals	CCC, CE, cURus, DNV, ENEC10, VDE, UKCA

→ General data

Design	Round
Operating temperature	-25 °C ... 70 °C
Panel cut-out	Ø 22.3 mm
Mounting depth	25.1 mm
Front bezel colour	Stainless steel
Contact material	AgNi
Storage temperature	-40 °C ... 80 °C
Standards	EN 60947-5-1 EN 61058-1
Degree of protection front	IP65
Material group	I

➔ Electrical data

Rated operating voltage IEC/EN 60947-5-1	240 V AC 120 V AC 250 V DC 125 V DC 60 V DC 24 V DC
Rated operating current IEC/EN 60947-5-1	1.5 A AC 3 A AC 0.27 A DC 0.55 A DC 1 A DC 2 A DC
Rated insulation voltage IEC/EN 60947-5-1	250 V AC 250 V DC
Rated voltage	250 V AC/DC
Rated current	6(4) A
Contact resistance	< 20 mΩ NO
Electrical lifetime	30,000 switching cycles at rated voltage 30,000 switching cycles DC-13
Utilisation category IEC/EN 60947-5-1	AC-15 B300 DC-13 Q300
Contact type	1NO
Bouncing time	< 10 ms NO
Rating	Pilot duty B300 24 V DC Pilot duty B300 3 A DC
Switching capacity	240 V AC/DC 1.5 A 250 V AC/DC 6 (4) A
Breaking capacity IEC/EN 60947-5-1	10 Ie AC 1.1 Ie DC
Minimum voltage	5 V
Current minimal	1 mA under laboratory conditions

Thermal continuous current IEC/EN 60947-5-1	5 A AC
Overvoltage category	II
Pollution degree	2

➔ Mechanical data

Connection	Faston terminals 2.8 mm x 0.8 mm
Tightenting torque fixing nut	1.5 Nm ... 1.9 Nm
Mounting position	Any
Mechanical lifetime	30,000 switching cycles
Switching function	Latching function
Switching position	0° key removable 90° maintained

Security note / installation note

- Designs for blade terminals: use partially or fully insulated blade terminals

Note

- Includes 2 keys
- Different locking options available on request

Technical drawings

➔ Dimensional drawing

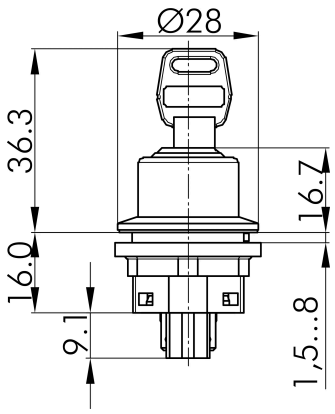

➔ Cutout dimensions

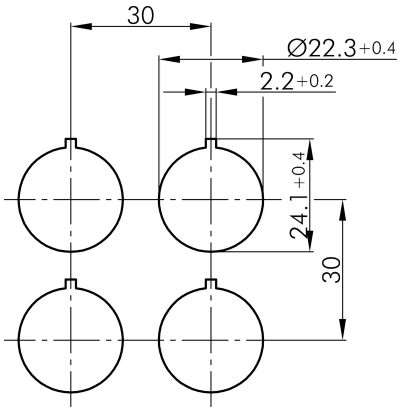

➔ Circuit diagram

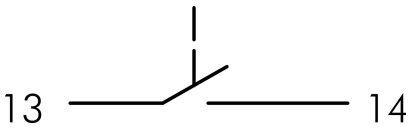

➔ Position indicator

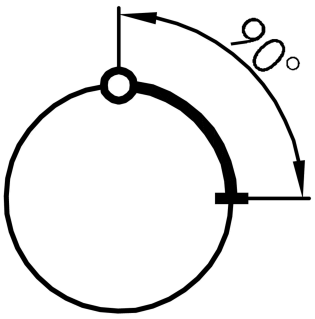

➔ Switching path diagram

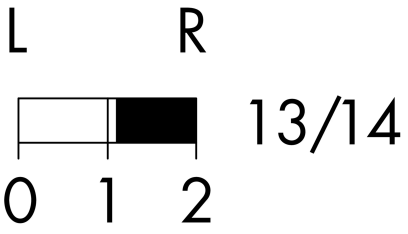

Georg Schlegel GmbH & Co. KG
Kapellenweg 4
88525 Dürmentingen / Germany

+49 (0) 7371 / 502-0
info@schlegel.biz
www.schlegel.biz