Datasheet

➔ RRJRSW

10/08/2026

Technical data

Knob set for potentiometers



Type	RRJRSW
Series	Rontron-R-Juwel
Rubric	Potentiometer
Approvals	CE, UKCA

A potentiometer drive is a control element used for the stepless adjustment of machine and system parameters. Turning the control knob generates an analog signal that is used by the control system to set target values, such as speed, position, or process variables. This control element enables simple, precise, and intuitive operation.

➔ General data

Design	Round
Operating temperature	-25 °C ... 70 °C
Panel cut-out	Ø 22.3 mm
Mounting plate thickness	1.5 mm ... 5 mm
Front bezel colour	Black
Weight	16.5 g
Storage temperature	-50 °C ... 85 °C
Degree of protection front	IP65

Note

- With rotary knob, but without potentiometer
- For potentiometers with a 6 mm shaft diameter and M10 x 0.75 thread
- Shaft length approx. 32 mm

Mechanical data

Tightening torque fixing nut	max. 1.5 Nm
Mounting position	Any

Technical drawings

➔ Dimensional drawing

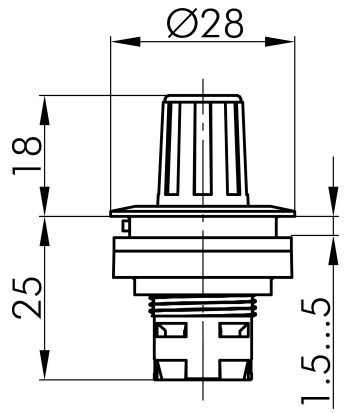

➔ Cutout dimensions

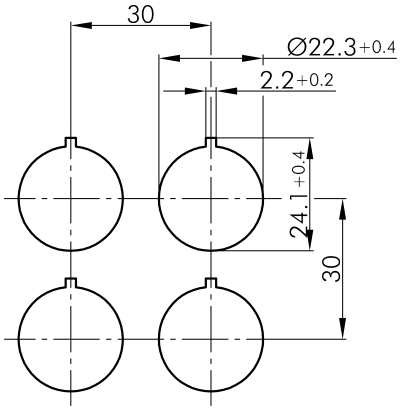

Georg Schlegel GmbH & Co. KG
Kapellenweg 4
88525 Dürmentingen / Germany

+49 (0) 7371 / 502-0
info@schlegel.biz
www.schlegel.biz