Datasheet

→ SVAN_RGBW_C183

03/24/2026

Technical data

Indicator light with RGBW LED and 5-pin M12 connection



Type	SVAN_RGBW_C183
Series	SHORTRON® connect
Rubric	Pilot light head/pilot lights
Approvals	CE, UKCA

→ General data

Design	Round
Illumination	Yes
Labelling option	Yes
Operating temperature	-25 °C ... 70 °C when operating a single LED -25 °C ... 50 °C in RGB mixing mode with a duty cycle of 100%
Panel cut-out	Ø 22.3 mm
Mounting depth	34.5 mm
Front bezel colour	Stainless steel
Storage temperature	-40 °C ... 80 °C
Standards	EN 60947-5-1 EN 61058-1
Degree of protection front	IP65 IP67
Degree of protection rear	IP65 with connected M12 IP67 with connected M12

➔ Electrical data

Illuminant power	max. 13 mA DC 26.4 V, per colour
Illuminant	LED integrated
Operating voltage illuminant	max. 24 V DC ± 10 %

Note

- The connector must not be connected or disconnected under load

Pin assignment

Pin	Connection LED
1	Red +
2	Green +
3	Blue +
4	White +
5	LED -

➔ Mechanical data

Connection	M12 connector 5-polig A coded
Tightenting torque fixing nut	1.5 Nm ... 1.9 Nm
Mounting position	Any

Note

- The M12 connection must not be subjected to mechanical loads, ensure sufficient strain relief!

Technical drawings

➔ Dimensional drawing

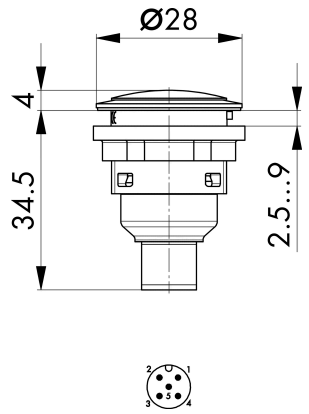

➔ Cutout dimensions

