Datasheet

➔ OKJWCL_GN

11/02/2026

Technical data

3-position illuminated selector switch, maintained / momentary

Type	OKJWCL_GN
Series	OKTRON®-JUWEL
Rubric	Selector switch
Approvals	CCC, CE, UKCA, UR

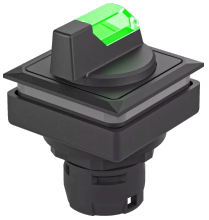

Selector switches allow for the unambiguous selection of different operating modes, functions, or machine states. With their defined switching positions, they offer a high degree of operational safety and ensure clear identification of the selected function. Whether in manual, automatic, or service mode, selector switches are proven control elements for machines and systems that require reliable and traceable selection of operating modes.

➔ General data

Design	Square
Illumination	Yes
Operating temperature	-25 °C ... 70 °C
Panel cut-out	23.1 x 23.1 mm
Mounting plate thickness	1 mm ... 4.5 mm
Color actuator	Green
Front bezel colour	Black
Storage temperature	-50 °C ... 85 °C
Degree of protection front	IP65

➔ Mechanical data

Operating travel	3 mm
Tightening torque fixing nut	0.9 Nm ... 1.1 Nm
Mounting position	Any
Switching position	-90° maintained 0° zero position 40° momentary

Technical drawings

➔ Dimensional drawing

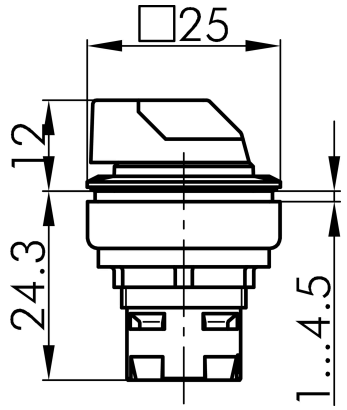

➔ Cutout dimensions

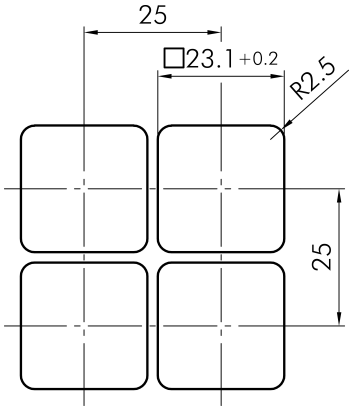

➔ Position indicator

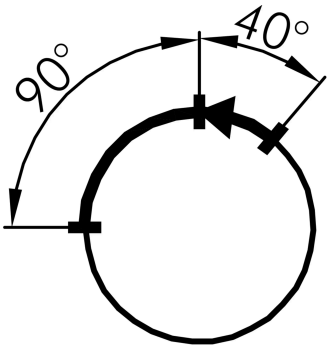

Georg Schlegel GmbH & Co. KG
Kapellenweg 4
88525 Dürmentingen / Germany

+49 (0) 7371 / 502-0
info@schlegel.biz
www.schlegel.biz